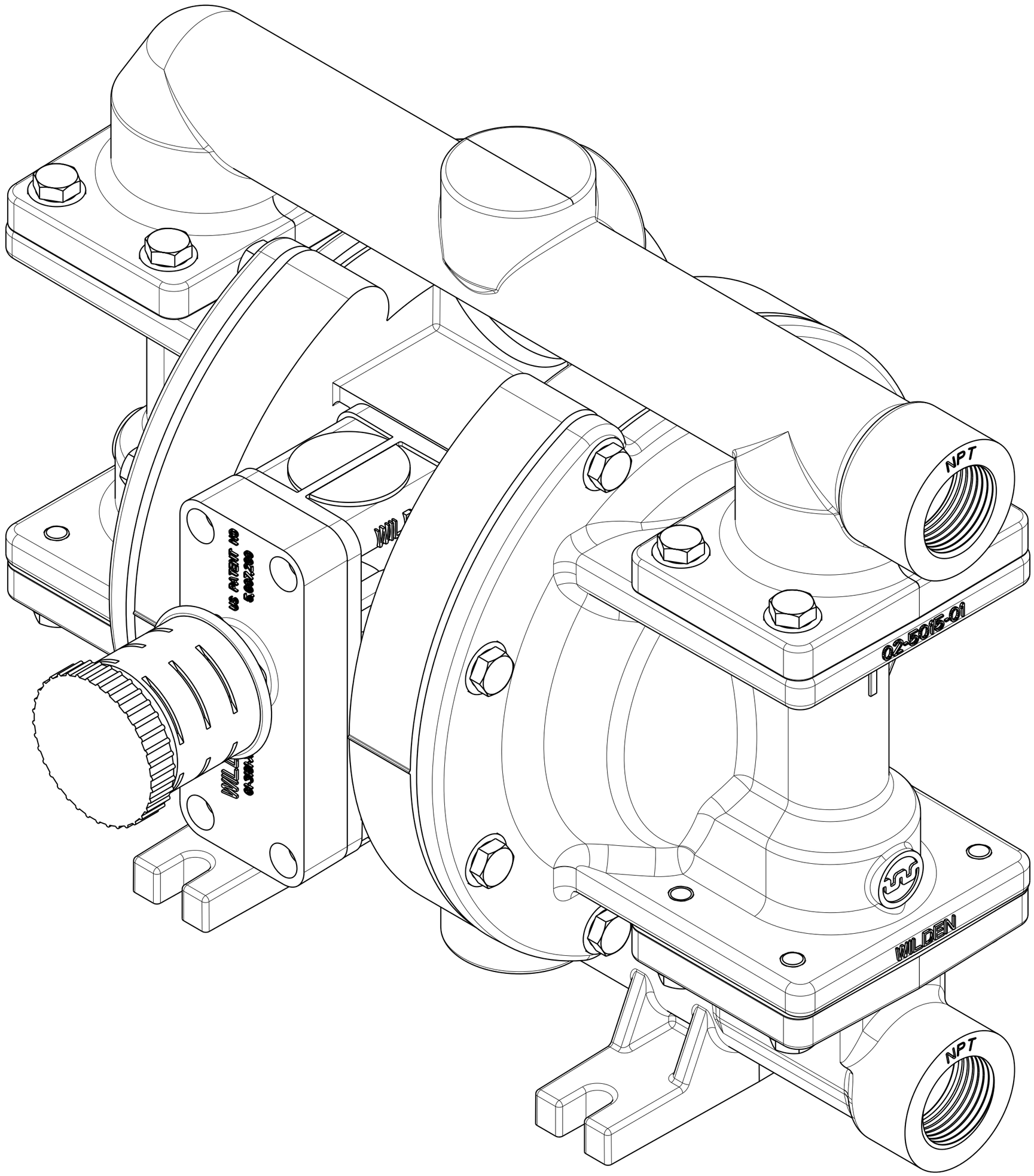
US PATENT NO
6,002,200
NPT
02-5015-01
WILDEN
NPT